展 開 図

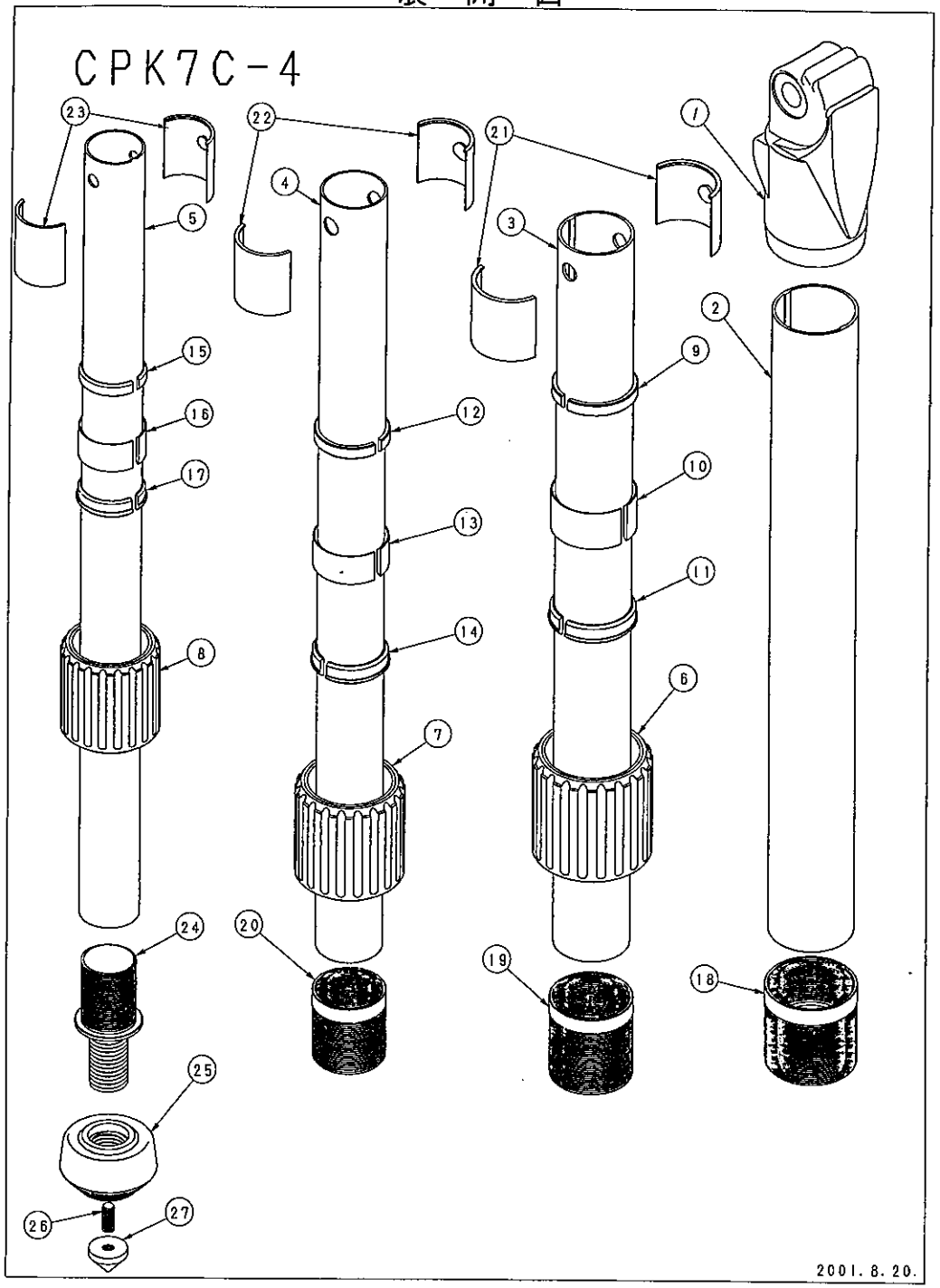

Velbon
TRIPOD

PARTS LIST

MODEL NAME:CPK7C-4

DESCRIPTION					
NO.	PARTS NAME				
1	CM7 LEG JYT				
2	CP57C-4LEG 2				
3	CPK7C-4LEG 3				
4	CPK7C-4LEG 4				
5	CPK7C-4LEG 5				
6	CPK LOCK NUT 2				
7	CPK LOCK UNT 3				
8	CPK LOCK NUT 4				
9	CMF SLEEVE 2A				
10	CPK SLEEVE 2B				
11	CMF SLEEVE 2C				
12	CMF SLEEVE 3AN				
13	CPK SLEEVE 3B				
14	CMF SLEEVE 3C				
15	CMF SLEEVE 4AN				
16	CPK SLEEVE 4B				
17	CMF SLEEVE 4C				
18	CPK NUT RING 2				
19	CPK NUT RING 3				
20	CPK NUT RING 4				
21	CPK STOPPER 3				
22	CPK STOPPER 4				
23	CPK STOPPER 5				
24	CMF5 SPIKET RIB-MP5				
25	MP5 SPIKE RBR				
26	M5 X 18 HEX-SET SC				
27	CM SPIKE-TIP				

展 開 図

CM-730
CM-740

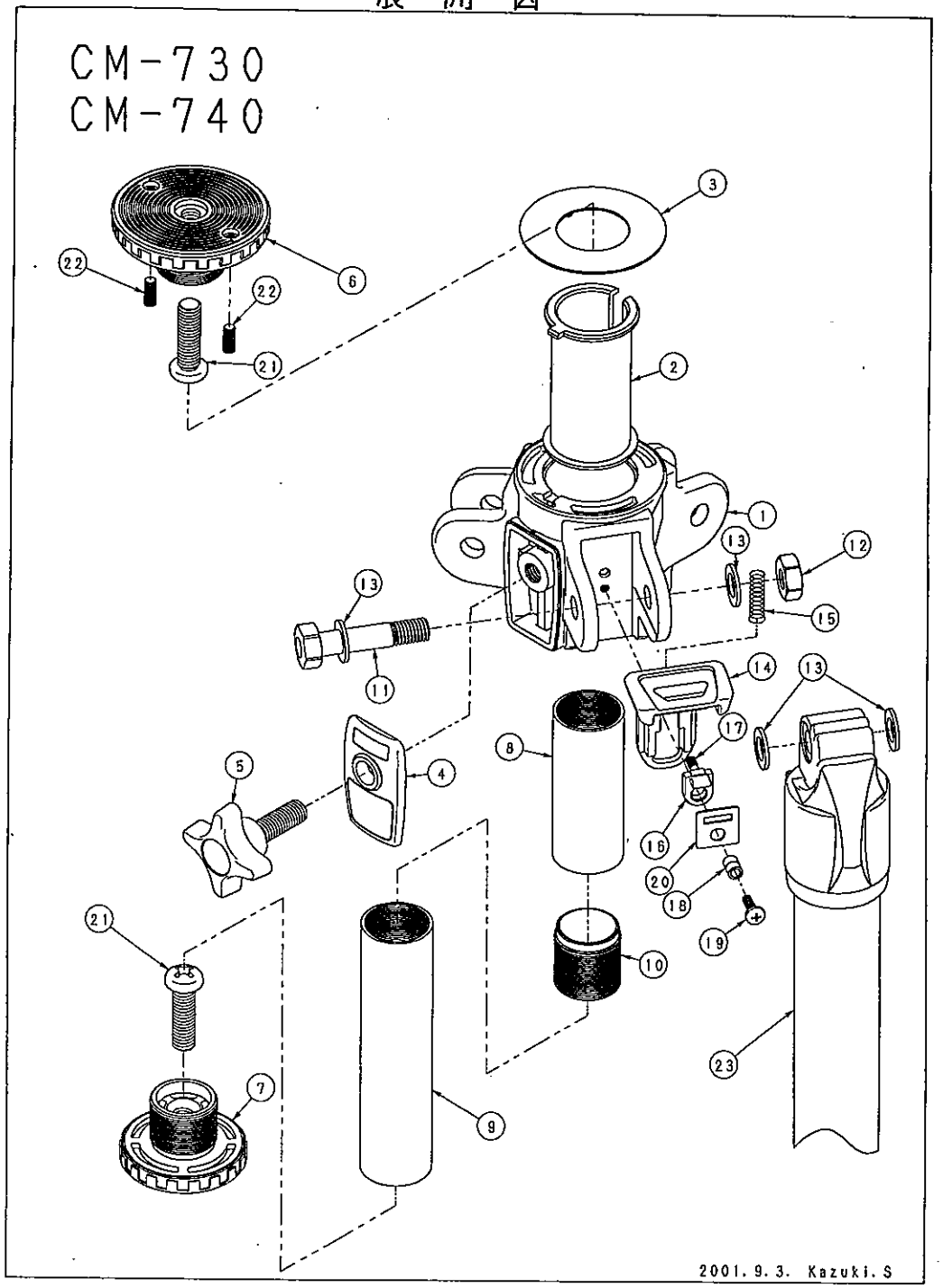

Velbon
TRIPOD

PARTS LIST

MODEL NAME:CM-740

DESCRIPTION					
NO.	PARTS NAME				
1	CM7 BODY				
2	CM7 SLIT RING				
3	CM7 BODY PAD				
4	CM740 EV-STOP CV				
5	AC 10 X 28				
6	CM8 PEDESTAL				
7	CM8 RACK END				
8	CM7 C PIPE UCT				
9	CM7 C PIPE LCT				
10	CM7CP JOINT				
11	CM8 10 X 48 HEX BOLT				
12	CM8 10 HEX NUT				
13	10.5-18W15				
14	CM8 AGL-ADJ				
15	MK6 CLICK SP				
16	CM5 ADJ PIN				
17	CM AGL-ADJ・SP				
18	4-6 X 8.6 RING				
19	M4 X 12 BIND ST				
20	CM5 AGL-ADJ・HD				
21	3/8 X 32 CROSS SC				
22	M5 X 10 HEX-SET SC				
23	CPK7C-4				