展開図

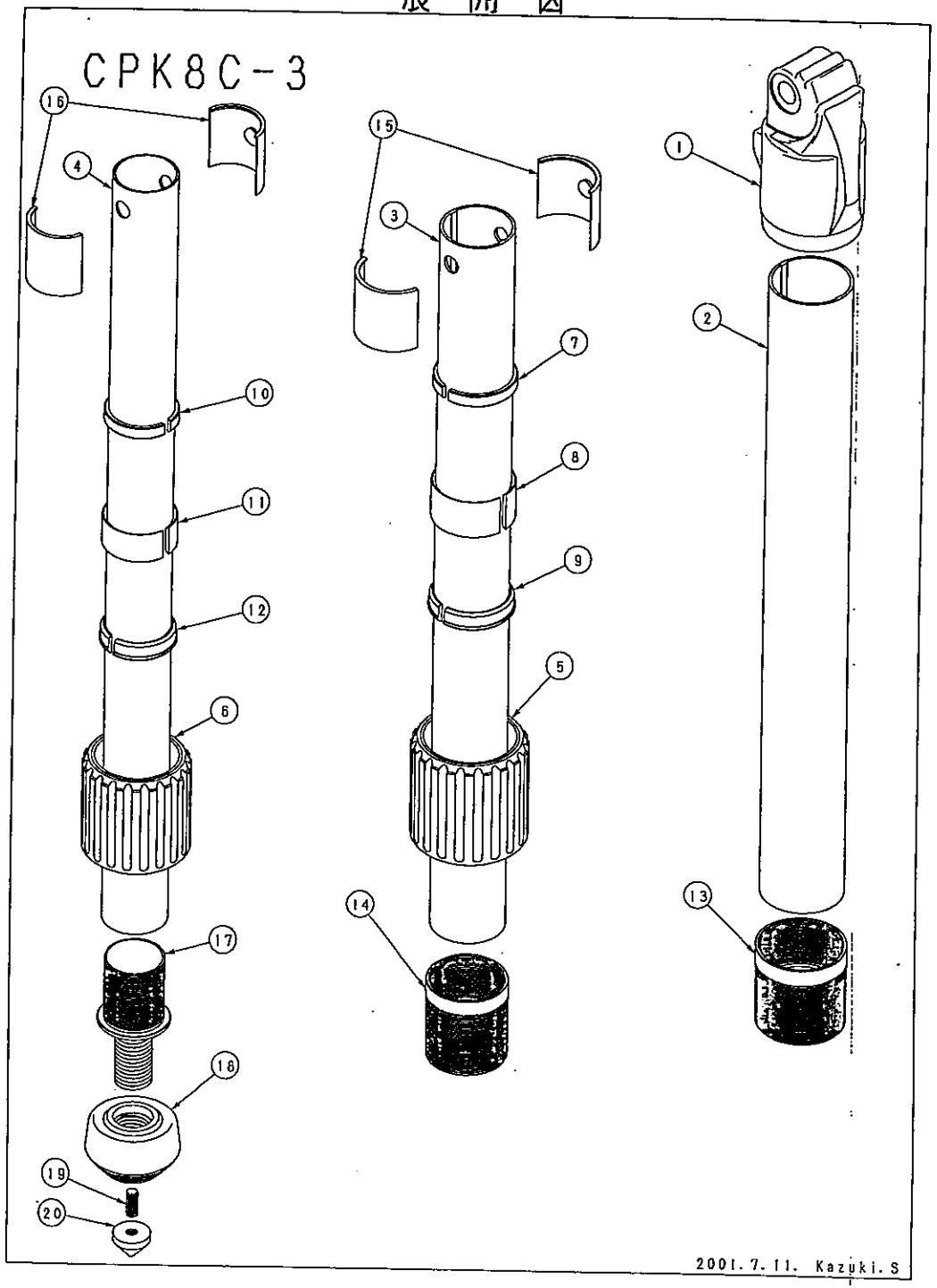

Velbon
TRIPOD

PARTS LIST

MODEL NAME:CPK8C-3

DESCRIPTION					
NO.	PARTS NAME				
1	CM8 LEG JYT				
2	CPK8C-3 LEG 1				
3	CPK8C-3 LEG 2				
4	CPK8C-3 LEG 3				
5	CPK LOCK NUT 1				
6	CPK LOCK NUT 2				
7	CMF SLEEVE 1A				
8	CPK SLEEVE 1B				
9	CMF SLEEVE 1C				
10	CMF SLEEVE 2A				
11	CPK SLEEVE 2B				
12	CMF SLEEVE 2C				
13	CPK NUT RING 1				
14	CPK NUT RING 2				
15	CPK STOPPER 2				
16	CPK STOPPER 3				
17	CMF3 SPIKE RIB				
18	MP5 SPIKE RBR				
19	M5 X 18 HEX-SET SC				
20	CM SPIKE-TIP				

展 開 図

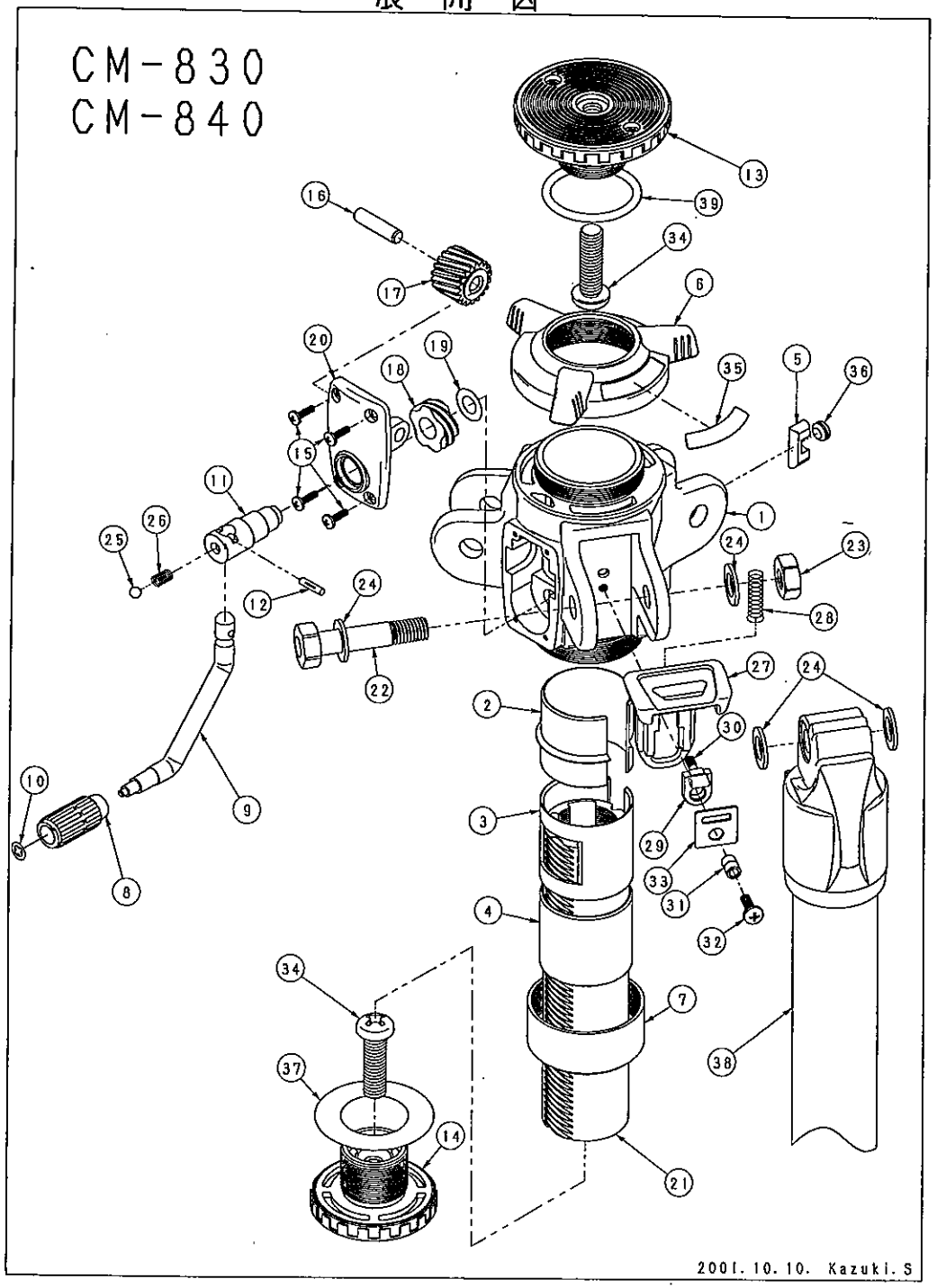

Velbon
TRIPOD

PARTS LIST

MODEL NAME:CM-830

NO.	DESCRIPTION PARTS NAME				
1	CM8 BODY				
2	CM8 SLEEVE A				
3	CM8 SLEEVE B				
4	CM8 SLEEVE C				
5	CM8 KEY				
6	CM8 EV-STPR				
7	CM8 LFC-ADJ				
8	MK7 RING KNOB				
9	MK7D CRK-LVR K				
10	CS3 STOP RING				
11	MK7 RING JIG K				
12	3 X 12 E PIN				
13	CM8 PEDESTAL				
14	CM8 RACK END				
15	3 X 10 SOREW				
16	6 X 28 PIN				
17	18-15 SPIRAL GEAR 1				
18	5-15 SPIKERIB M1				
19	8-15 PW 0.4				
20	CM8 GEAR COVER V				
21	CM8 RACK B 324				
22	CM8 10 X 48 HEX BOLT				
23	CM8 10 HEX NUT				
24	10.5-18W15				
25	3/16 BALL				
26	VS PUSH SP				
27	CM8 AGL-ADJ				
28	CM8 AGL-ADJ・SP				
29	CM5 ADJ PIN				
30	MK6 CLICK SP				
31	4-6 X 8.6 RING				
32	M4 X 12 BIND ST				
33	CM5 AGL-ADJ・HD				
34	3/8 X 32 CROSS SC				
35	CM840 PLATE				
36	M8 X 4.5 SLOT-SET SC				
37	28.4 -50 PTP				
38	CPK8C-3				
39	O-RING P35				