展 開 図

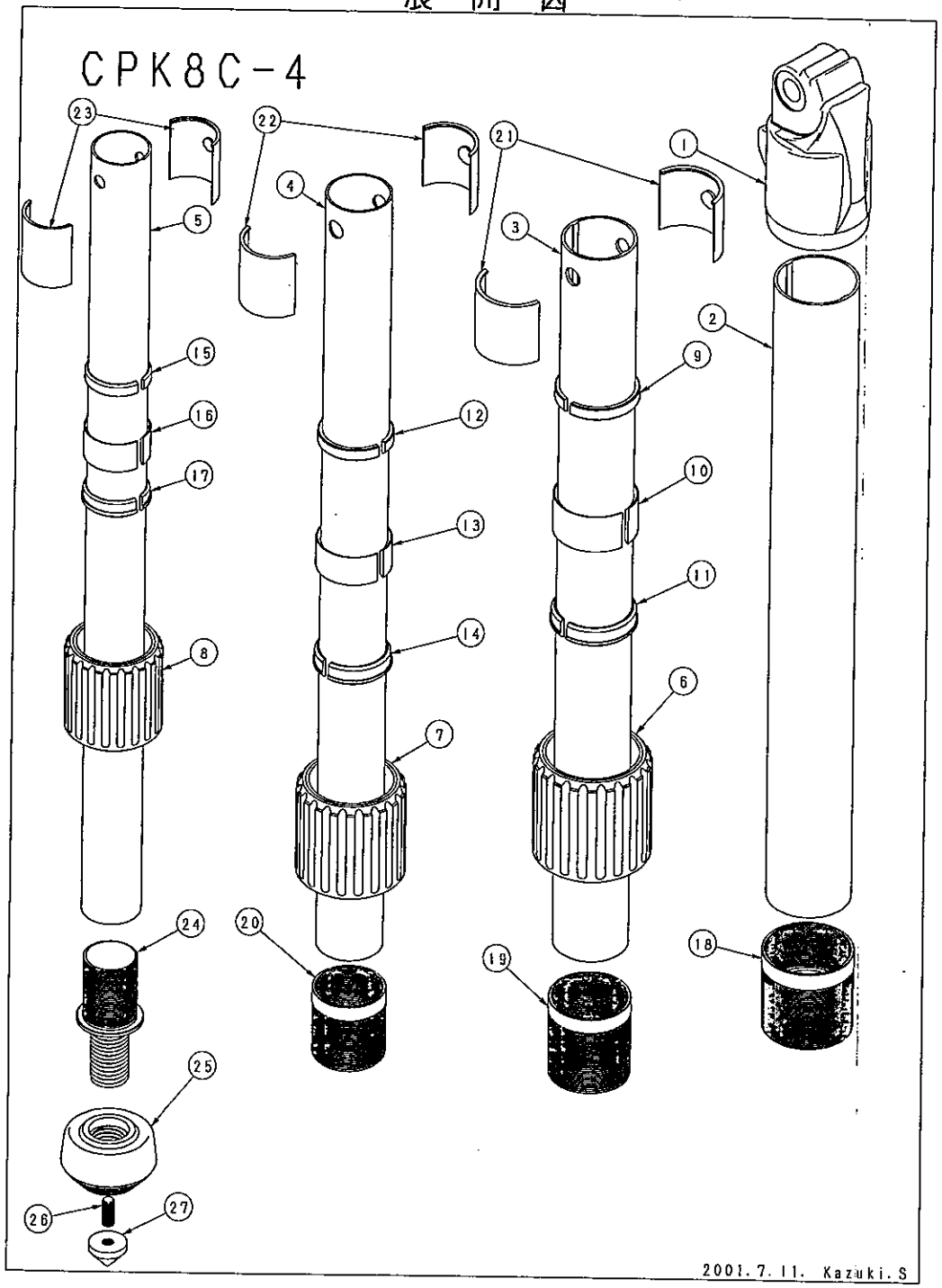

Velbon
TRIPOD

PARTS LIST

MODEL NAME:CPK8C-4

DESCRIPTION					
NO.	PARTS NAME				
1	CM8 LEG JYT				
2	CPK8C-4LEG 1				
3	CPK8C-4LEG 2				
4	CPK8C-4LEG 3				
5	CPK8C-4LEG 4				
6	CPK LOCK NUT 1				
7	CPK LOCK NUT 2				
8	CPK LOCK UNT 3				
9	CMF SLEEVE 1A				
10	CPK SLEEVE 1B				
11	CMF SLEEVE 1C				
12	CMF SLEEVE 2A				
13	CPK SLEEVE 2B				
14	CMF SLEEVE 2C				
15	CMF SLEEVE 3AN				
16	CPK SLEEVE 3B				
17	CMF SLEEVE 3C				
18	CPK NUT RING 1				
19	CPK NUT RING 2				
20	CPK UNT RING 3				
21	CPK STOPPER 2				
22	CPK STOPPER 3				
23	CPK STOPPER 4				
24	CMF4 SPIKE RIB				
25	MP5 SPIKE RBR				
26	M5 X 18 HEX-SET SC				
27	CM SPIKE-TIP				

展 開 図

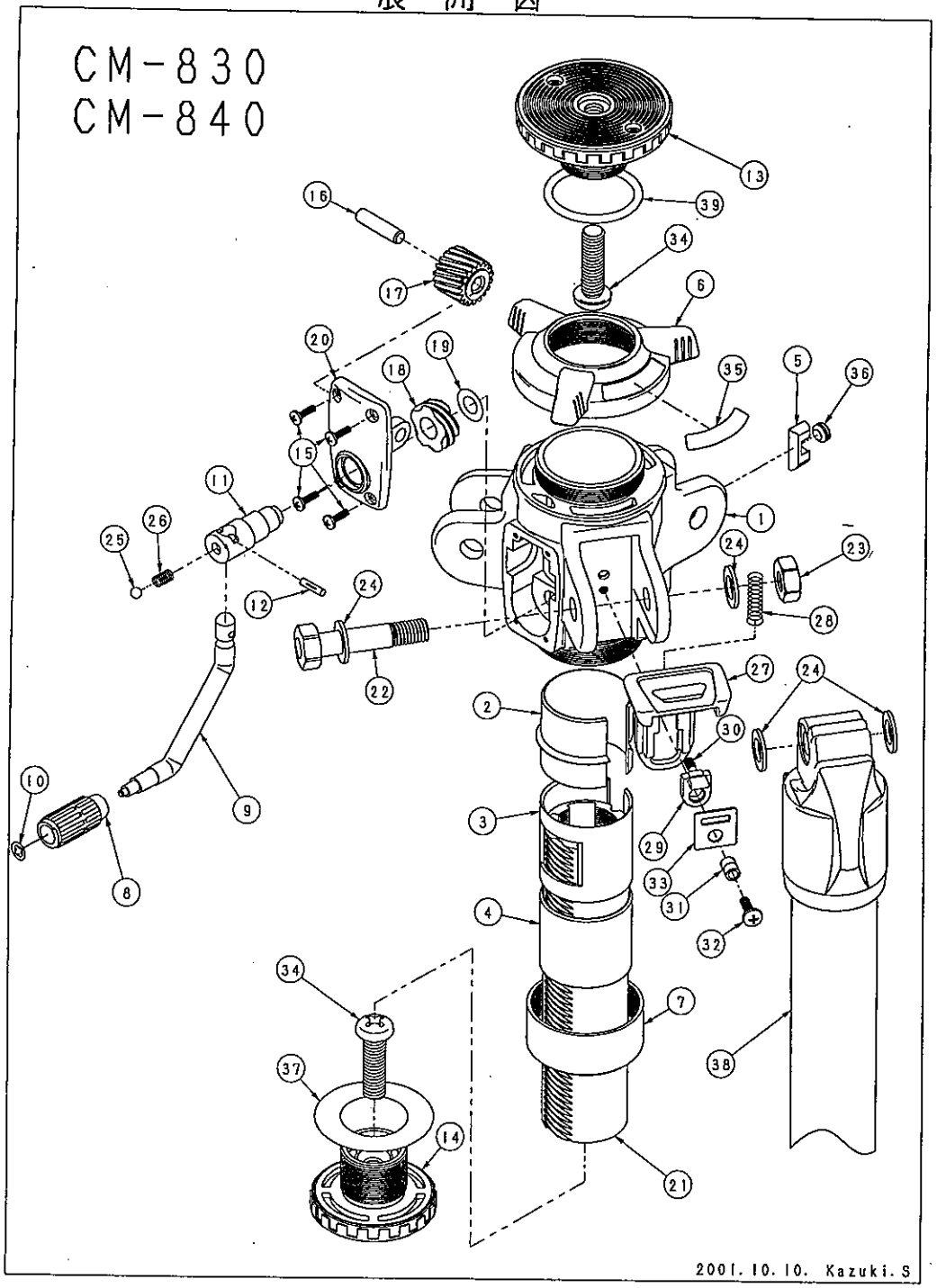

Velbon
TRIPOD

PARTS LIST

MODEL NAME:CM-840

DESCRIPTION					
NO.	PARTS NAME				
1	CM8 BODY				
2	CM8 SLEEVE A				
3	CM8 SLEEVE B				
4	CM8 SLEEVE C				
5	CM8 KEY				
6	CM8 EV-STPR				
7	CM8 FLC-ADJ				
8	MK7 RING KNOB				
9	MK7D CRK-LVR K				
10	CS3 STOP RING				
11	MK7 PING JIG K				
12	3 X 12 E PIN				
13	CM8 PEDESTAL				
14	CM8 RACK END				
15	3 X 10 SOREW				
16	6 X 28 PIN				
17	18-15 SPIRAL GEAR 1				
18	5-15 SPKIERIB M1				
19	8-15 PW 0.4				
20	CM8 GEAR COVER V				
21	CM8 RACK B 324				
22	CM8 10 X 48 HEX BOLT				
23	CM10 HEX NUT				
24	10.5-18 W 15				
25	3/16 BALL				
26	VS PUSH SP				
27	CM8 AGL-ADJ				
28	CM AGL-ADJ ・SP				
29	CM5 ADJ PIN				
30	MK6 CLICK SP				
31	4-6 X 8.6 RING				
32	M4 X 12 BIND ST				
33	CM5 AGL-ADJ・HD				
34	3/8 X 32 CROSS SC				
35	CM840 PLATE				
36	M8 X 4.5 SLOT-SET SC				
37	28.4-50 PTP				
38	CPK8C-4				
39	O-RING P35				